Montauk 30

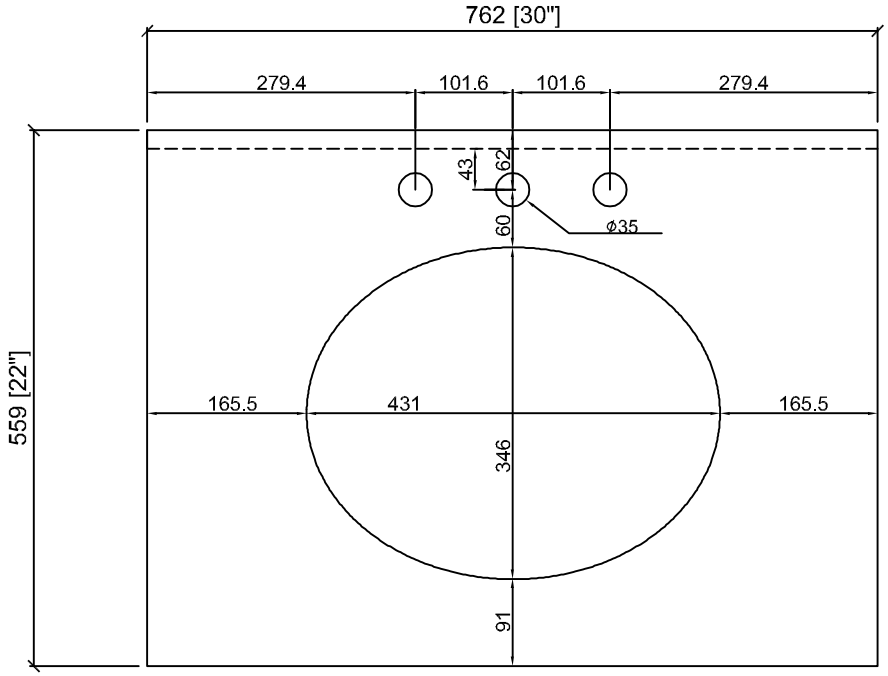
762 [30"]
279.4
101.6
101.6
279.4
43
62
60
ϕ35
559 [22"]
165.5
431
165.5
346
91

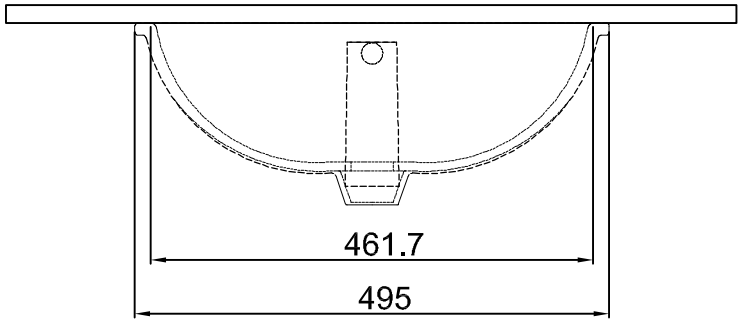
461.7
495

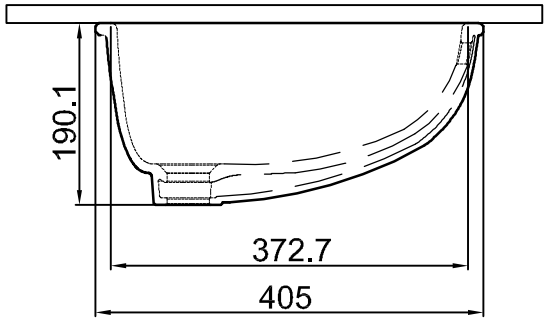
190.1
372.7
405